AXILE
agile smart machining

G6 SERIES

GANTRY TYPE 5-AXIS VERTICAL MACHINING CENTER

www.axilemachine.com

WE ARE AXILE

AXILE designs and builds agile smart 5-axis VMCs with leading automation solutions for manufacturers of complex parts and components.

> **“ We believe manufacturers shouldn’t have to choose between high-speed and high-performance 5-axis machines. ”**

By combining sheer agility, digitalized intelligent automation, and a new standard of 5-axis machining, we’ve created an all-new approach:

Agile Smart Machining.

In short, our dedicated team of industry experts brings together ultra-high removal rates, pinpoint precision, and 24/7 automation and reliability within each and every AXILE 5-axis machine.

Our breakthrough design concepts and advanced proprietary technologies serve highly sophisticated manufacturers of complex parts and components for applications in aerospace, die and mold, medical, and general job shop, among others.

The AXILE service and support network spans nearly 50 countries, with more than 70 distributors across Asia, Europe, and the Americas, and a service center in Croatia.

CONTENTS

G6 GANTRY TYPE VMC

With a rotary table diameter of 600 mm, the G6 is a compact vertical machining center designed for agile, smart machining of smaller workpieces requiring complex geometries and intricate features. This highly versatile VMC delivers full 5-axis CNC machining, with the built-in spindle moving along the X,Y,Z-axis, and the table moving in rotary C-axis and swiveling A-axis.

The G6's perfect balance of speed and precision makes it the perfect option for job shops and production lines seeking an upgrade in machining capabilities, delivering high removal rates, excellent surface finishes, and maximum production efficiency.

In addition to the high-performance G6 model, AXILE also offers the G6 MT, which combines both milling and turning in one machine, greatly increasing operational flexibility. By reducing set-up times and potential clamping errors, the G6 MT can efficiently machine a wider variety of parts, including cylindrical components.

DESIGN CONCEPT

THE STRUCTURE

1

Spindle moved by 3 linear axes	No rotary axis between the tool and the machine body, for better machining rigidity.

2

Perfect U-shape closed gantry design	Same stability in all travels of X and Y axes Excellent accessibility to working area

3

Table moved by swivelling rotary axes	Best accuracy with fixed relative position between 2 rotary axes

4

Massive gantry sliding on 2 symmetric synchronized axes	Best servo response to any milling forces

5

All body made of high-quality casting	Homogeneous thermal behaviour Optimal damping of machining vibrations

6

Integrated chip disposal channel directly under the table	Quick evacuation of chips for high chip volume machining

7

Table moved by swivelling rotary axes	Best accuracy with fixed relative position between 2 rotary axes

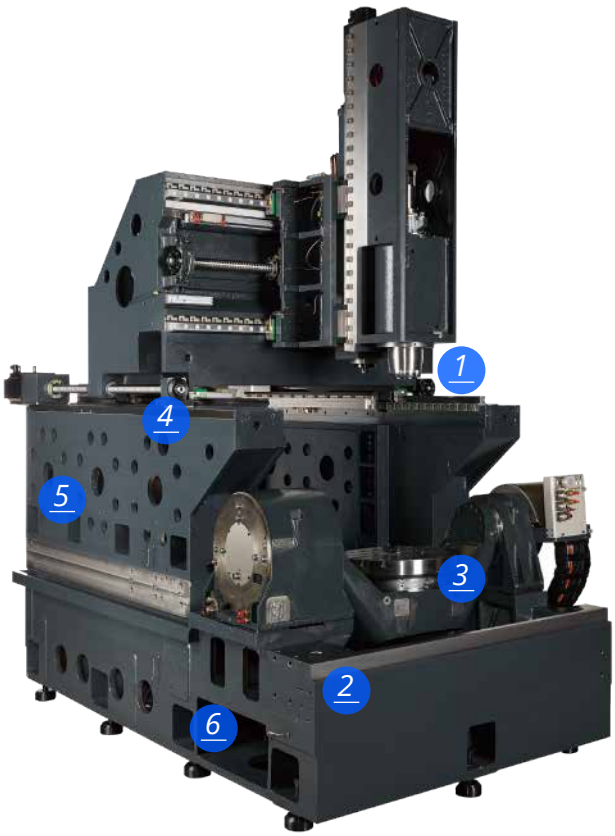

G6 front

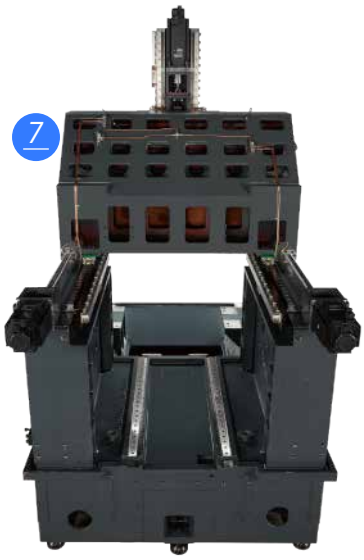

G6 back

AGILITY

LINEAR AXES

1

Direct driven servomotors (no belts/gears)	Best dynamic and minimal elasticity in the driving system

2

Double symmetric and synchronized axes (Y1, Y2)	Best dynamic for the gantry no matter the position of the machining force
Linear scales with 0,1 µm resolution in X, Y1, Y2 and Z axes	Ensures optimal synchronization in Y1 and Y2 axes, and best accuracy for ALL axes
Double roller type linear guideways	Best high-feed movement and vibration damping
Double pre-loaded double-nut ballscrews	Minimized backlash allowing high-feed movements

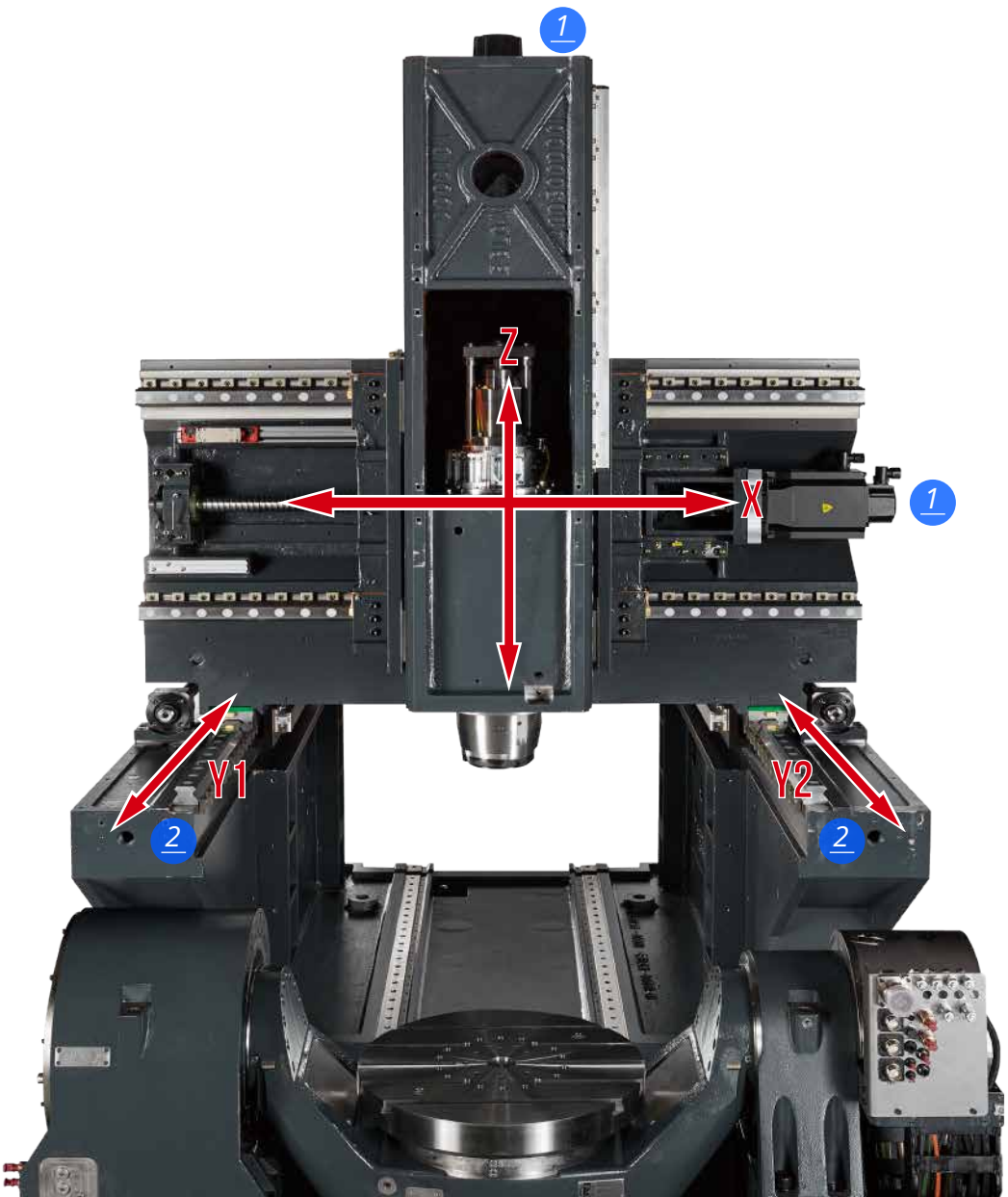

SWIVELLING-ROTARY AXES

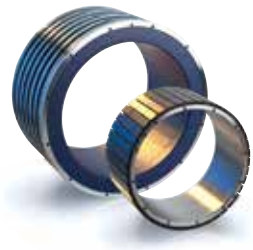

1	
Integrated and ready-to-use hydraulic and pneumatic ports	Simplifying parts clamping process
2	
Torque motor-driven rotary axis (C)	Highest dynamics
Torque motor-driven swivelling axis (A)	Highest accuracy
Brakes in rotary (C) and swivelling (A) axes	High-repeatibility in 5-axis operation when using the brakes
3	
High-resolution, direct absolute rotary measuring system	Zero-backlash and high accuracy

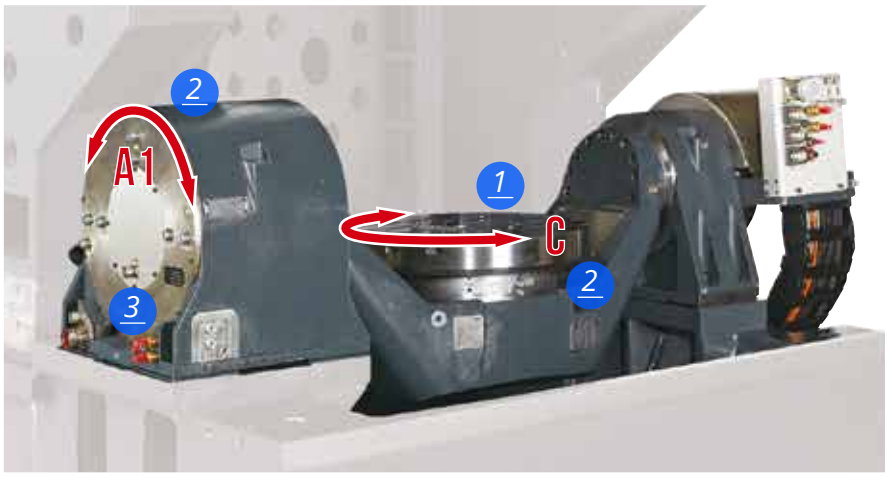

G6 Standard table

G6 MT table

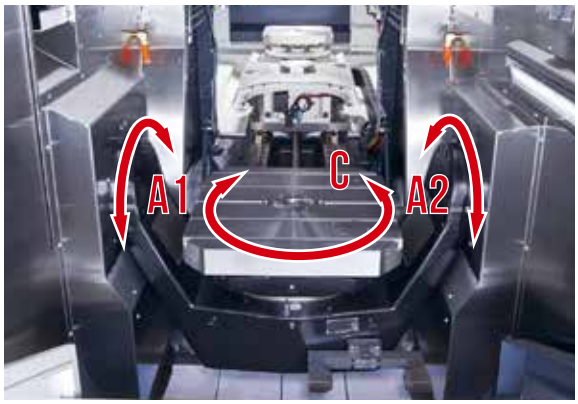

G6 MPC table

ACCURACY

THE CORNERSTONE OF 5-AXIS MACHINING

Linear axes accuracy

Ballscrew´s thermal growth	0.1µm resolution absolute linear scales in ALL axes

Rotary axes accuracy

Elasticity and backlash of driving system	Direct-driven torque motors with no backlash
Angular error is multiplied by the distance from rotary axis to machining point	+/- 5" accuracy absolute rotary scale feedback

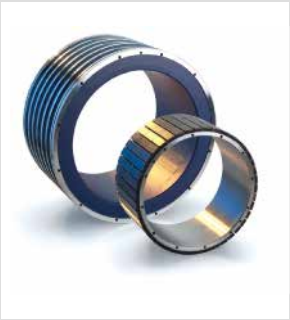

Thermal control

Heat generated by spindle and torque motors	Spindle and torque motors are cooled with a water chiller close-circuit and a cooling unit

Linear-rotary axes relative positioning

The swivelling-rotary table might shift its relative position to the 3 linear axes by many reasons generating an increasing error in the part	CNC embedded compensating functions like Kinematics (Heidenhain), Kinematic chain (Siemens) and Tilted working plane indexing (Fanuc)

SPINDLE

HIGH-PERFORMANCE BUILT-IN SPINDLE SELECTION

> 15.000 rpm
> HSK A63
> 130/200 Nm S1/S6-40%
> 30/46 kW S1/S6-40%
> Double coil asynchronous motor

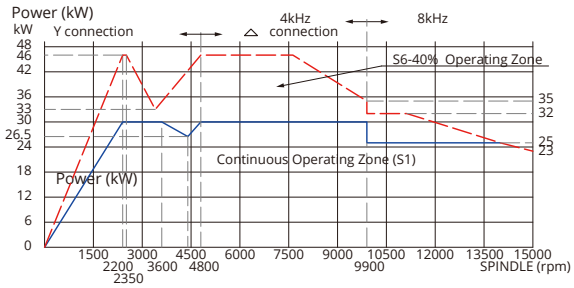

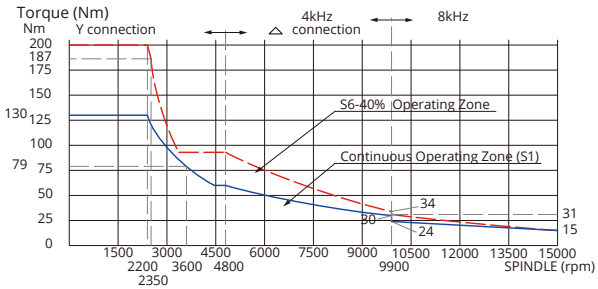

> 20.000 rpm
> HSK A63
> 87/135 Nm S1/S6-40%
> 25/40 kW S1/S6-40%
> Double coil asynchronous motor

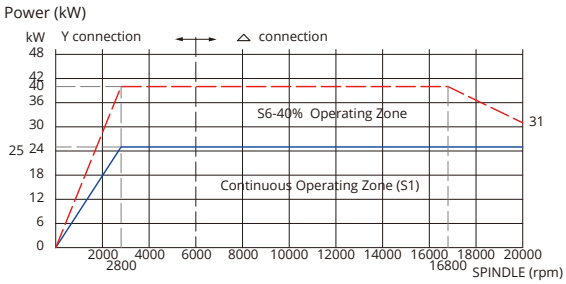

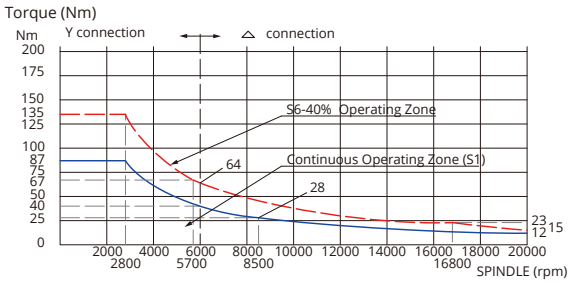

> 36.000 rpm
> HSK E50
> 10.4/13.5 Nm S1/S6-40%
> 20/26 kW S1/S6-40%
> Single coil asynchronous motor

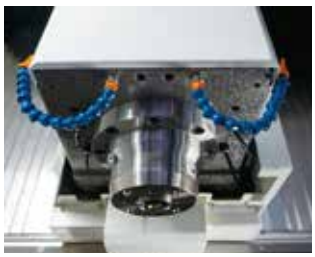

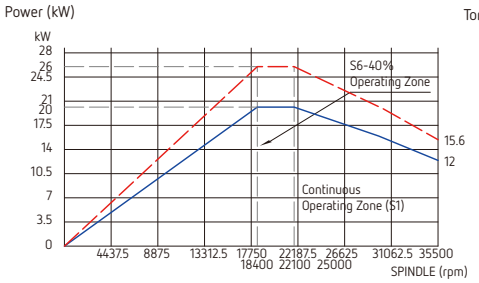

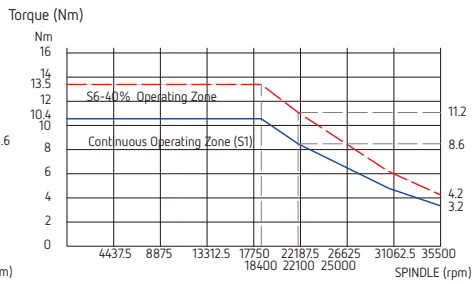

CHIP MANAGEMENT

FLUSHING CHIPS AWAY

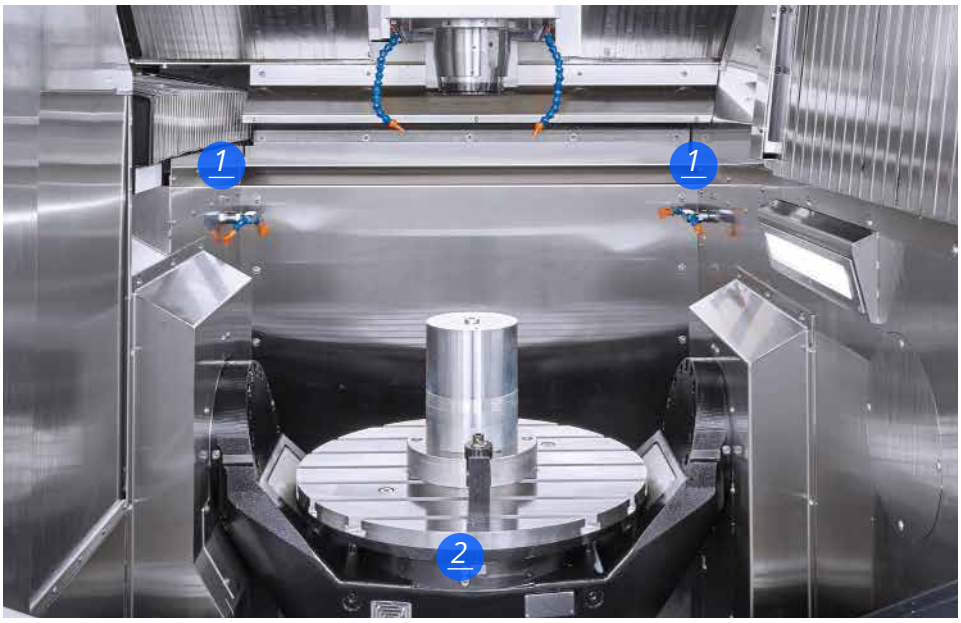

High-quality stainless steel working area	Long-lasting clean operation
Sharp walls and no-corner design	Easier to flush away chips by shower
2 x led lights spindle nose	For optimal illumination of the tool cutting

1 Chip wash down
2 Chip conveyor
3 4x coolant at spindle nose
4 Coolant through spindle
5 Coolant flushing
6 Air flushing
7 2x led lights

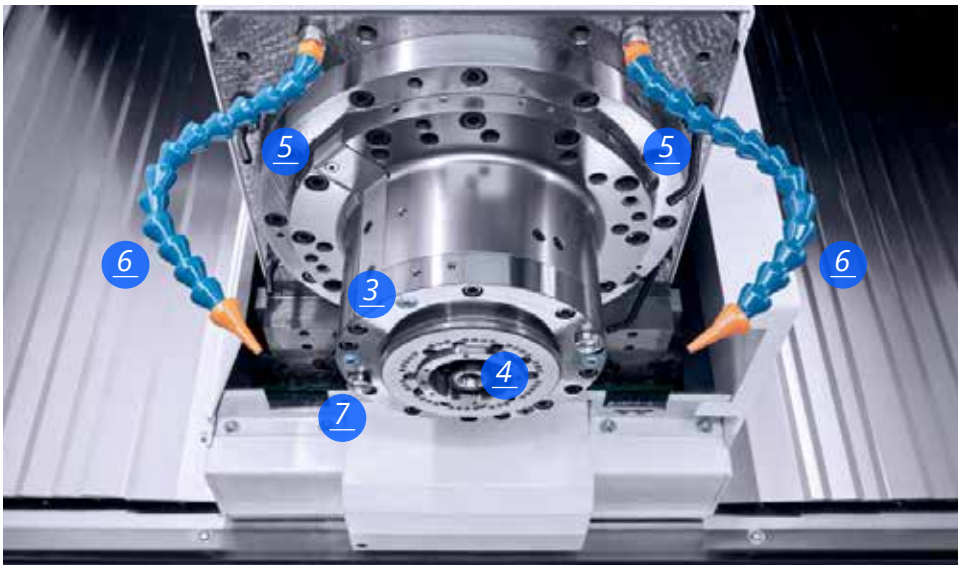

TOOL MANAGEMENT

TOOL MAGAZINE SELECTION FOR EVERY APPLICATION

1

2

1

Simple random type carrousel for 80 (std) or 120 tools.	Fastest tool change and optimized space saving.

2

Matrix rack magazine is available with 3 different sizes of 164, 242 and 320 tools.	Perfect solution for multi-pallet automation with bigger number of different parts and need for sister tools to reach a practical unmanned operation.
Tools are accessible from the front-left side of the machine and stored in horizontal.	Tools can be easily changed during automatic operation in the same area for machining supervision, CNC panel and workpiece loading and unloading.
Smart tool: interface panel is used to select the tool. When finished, the system checks whether all tool holders are in the right position.	Avoid human failures when manually change tool to spindle, protecting spindle and reducing down-time.

ERGONOMICS

ACCESSIBILITY TO WORKING AREA

Large front door opening	Comfortable access to work area for workpiece preparation and supervision
Short distance from operator to table	Ergonomic loading and unloding of small parts
Automatic roof to open ceiling working area	Easy loading and unloading of heavy and bulky workpieces by over-head crane

AUTOMATIC ROOF

For overhead crane loading and unloading

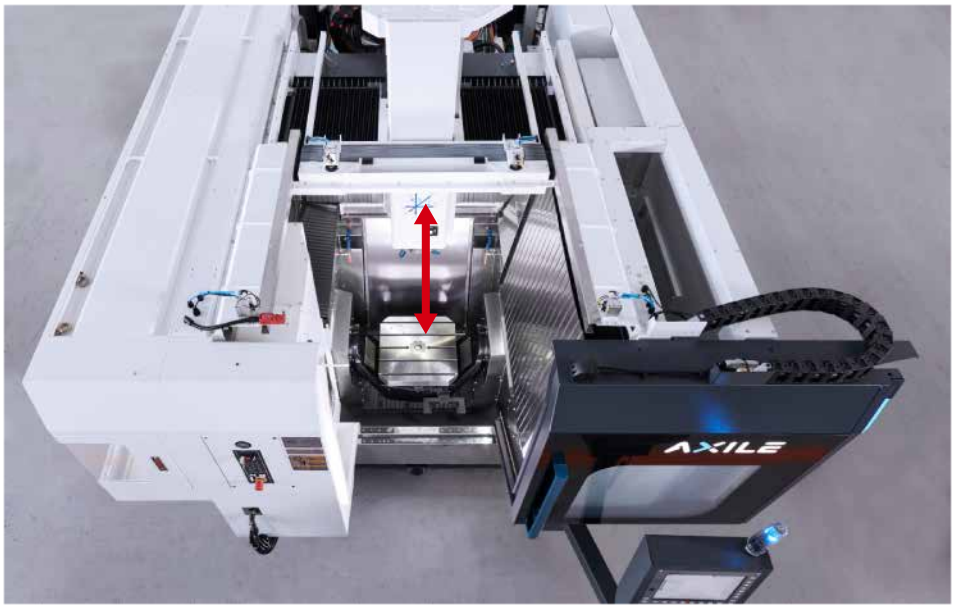

Automatic sliding of roof

CONTROL UNIT

A CONTROLLER FOR EVERY USER

Heidenhain TNC 640

> Kinematics
> Dynamic Collision Monitoring
> Tool Center Point Management
> Tilted the Working Plane

Siemens 840D SL/SINUMERIK ONE

> Kinematics chain
> Collision Avoidance
> 5-axis transformation with tool orientation
> Swivel the Coordinate System

Fanuc 31i-B5 plus

> 3D Interference Check
> High Speed Smooth TCP
> Tilted Working Plane indexing

Heidenhain TNC 640

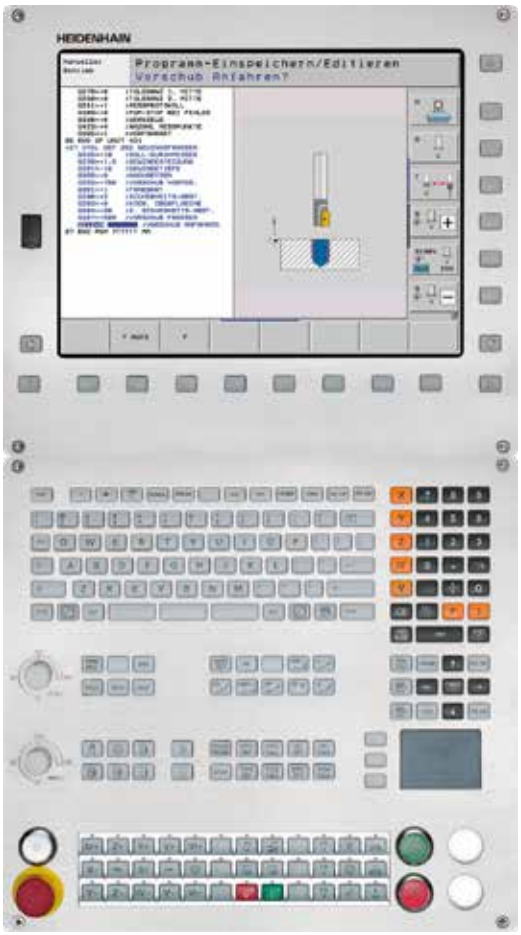

Siemens 840D SL

Fanuc 31i-B5 plus

MILL-TURN

Mill-turn for those looking for the maximum integration of metal-cutting processes in a single step, reducing complexity of the process and chance of error in the clamping.

C-axis motor is cooled as in the milling version. Additionally the C-axis bearing is cooled in the inner and outer to ensure the long lasting accuracy and life.

Table diameter: 500 mm
Max turning speed: 1500 rpm
Max table load in turning: 350 kg
Max table load in milling: 500 kg

Integrated balancing system that can be monitored from the additional screen located on top of the panel, with the help of a sensor located in the A-axis (opt)

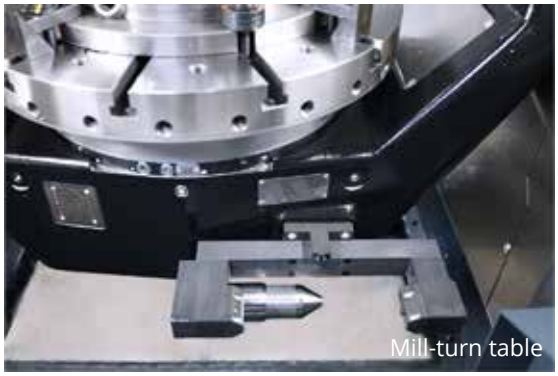

Mill-turn table

The mill-turn table equips with a specially designed mechanical and laser type tool measurement system.

TECHNOLOGIES

SMT™

SMART MACHINING TECHNOLOGY

As pioneers of advanced mechatronic systems with decades of R&D expertise, AXILE has taken 5-axis CNC machining to the next level. Our patented SMT™ (Smart Machining Technology) delivers groundbreaking compensation and calibration functionality for unrivaled cutting speeds and industry-leading accuracy, and more importantly, resolves the aforementioned issues created by thermal expansion.

With AXILE's SMT™ manufacturers can have it all. There's no longer the need to choose between speed and precision, meaning manufacturers can produce superior parts rapidly, while also securing total process reliability and long-term machining performance.

Axial Accuracy Control

TEMPERATURE SENSORS → MULTIPLEXER /AMPLIFIER → MPU → CNC

compensation command

> AXIAL THERMO MONITORING
Integration of temperature sensors and thermal error model

> HIGH PRECISION
Thermal induced positioning error compensation

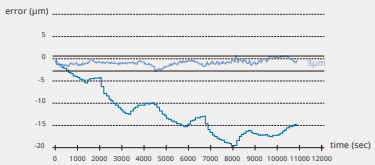

THERMAL ERROR BEFORE AND AFTER COMPENSATION

With thermal compensation system, the thermal error van be reduced from 20μm to 3μm.

Tool-tip Positioning Control

DISPLACEMENT METER → AMPLIFIER → MPU → CNC

compensation command

> HIGH ACCURACY
Directly measuring expansion

> BETTER SURFACE FINISH
5~6 times accuracy improved

> REAL-TIME COMPENSATION
Electrical type sensor

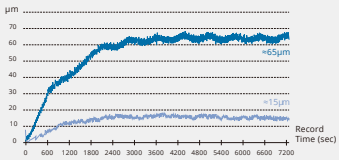

With compensation, the displacement of tool tip is reduced from 65μm to 15μm.

ACCURACY IMPROVED **5~6 TIMES!**

Spindle Vibration Supervision

VIBRATION SENSOR → AMPLIFIER → MPU → CNC

compensation command

MPU ↔ MEMORY

> HIGH FINISH QUALITY
Spindle Life Time

> LONGER LIFE TIME
Wear reduction on spindle bearings and tools

> EASY FOR MAINTENANCE
Up to 12000 abnormal vibration data recording

THREE LEVELS FOR SPINDLE VIBRATION MONITORING

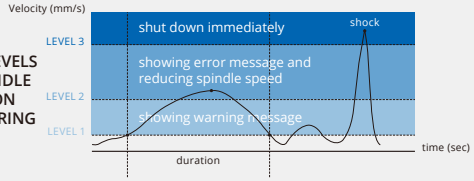

Metal Removal Rate Optimization

> OPTIMAZATION PRODUCTION
Fully utilize machine capability

> EXTREMELY FAST PROCESSING TIME
Maximization of metal removal rate

> HIGH TOOL DURABILITY & PERFECT SURFACE ROUGHNESS
Stable cutting force and chatter-free machining
Surface Roughness improved 61.5%
Spindle load decrease 13.6%

INTELLIGENT MONITORING SYSTEM

The future of manufacturing depends on optimized, intelligent production. To gain an edge on the competition, embracing smart manufacturing is the best way to stay ahead of the curve.

To deliver agile smart machining, and that all-important competitive edge, we have created ART™, an intelligent monitoring system that enables 24/7 operations and eliminates unexpected downtime. ART™ monitors all wearing components, energy consumption, and fluids such as lubricant and coolant, to supply real-time status updates on the machine and its components, and to pre-empt future issues.

Utilizing ART™ in daily operations immediately improves production efficiency by empowering machinists to make informed decisions. Moreover, ART™ gives manufacturers the reassurance required to embrace automation solutions, by delivering vital oversight through total operational transparency.

ART™ framework

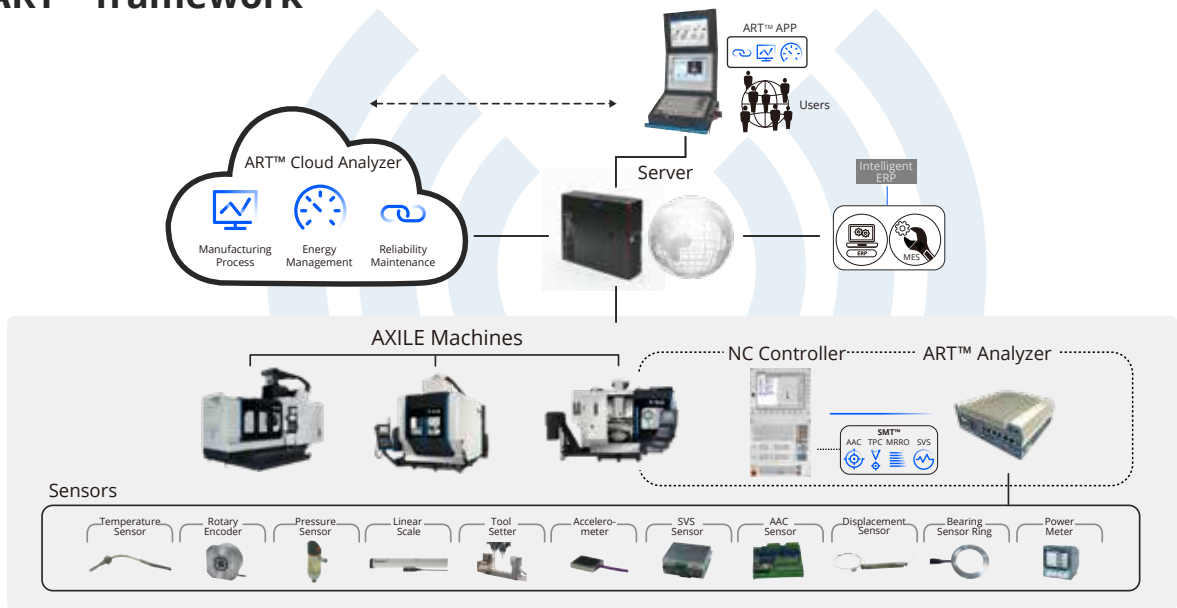

3 Core Functions to Boost Productivity & Profitability

Reliability Maintenance (RM)

Unexpected downtime is the enemy of profitability. ART™ delivers machine components diagnosis, machine lifetime estimation, and consumable supplies monitoring to pre-empt machine failure and eliminate unplanned down-time.

Manufacturing Process (MP)

Knowledge is power. ART™ achieves superior data collection and analytics on machine status and utilization rates, to deliver real-time information for optimized production strategies.

Energy Management (EM)

Every penny counts. ART™ enables manufacturers to monitor their power consumption, to identify ways to maximize energy efficiency and reduce expenditure.

Industry 4.0 Solutions to Intelligent Machine

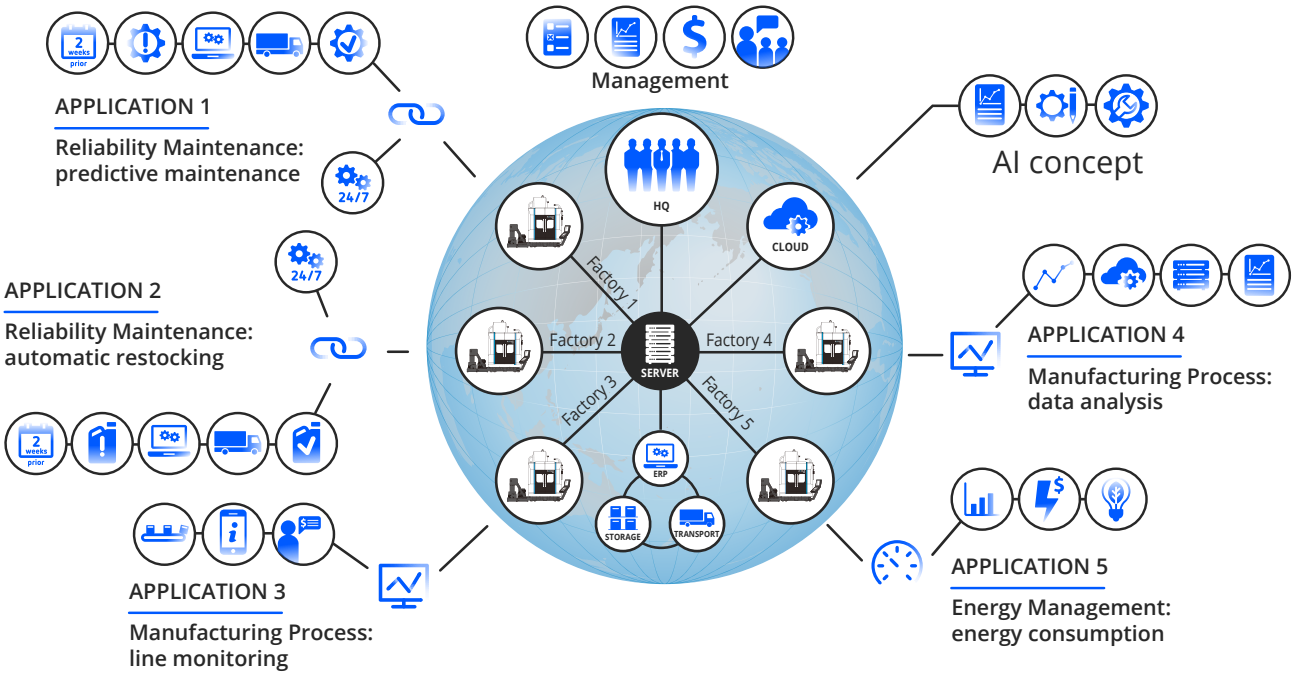

How ART™ Brings Production Benefits

> Clearly displays machine status, for quick decision-making
> Maximizes machine accessibility and utilization, for optimized production
> Provides real-time notification of abnormal conditions, for swift intervention
> Gives machinists the information required to optimize removal rates and machine lifetime

How ART™ Brings Maintenance & Service Benefits

> Delivers pre-emptive error messages prior to breakdown, to eliminate unexpected downtime
> Decreases service expenses, by precisely identifying the issue
> Enhances service efficiency, by recommending appropriate action
> Reduces spare parts inventory, by highlighting exactly what is needed and when
> Automatically orders new parts, by linking to online purchasing system
> Allows machines and equipment to remain on stand-by, always ready to work

DIGITALIZED INTELLIGENT AUTOMATION

AXILE's digitalized intelligent automation consists of our range of innovative automatic pallet changing solutions and flexible manufacturing systems, supported by our proprietary SMT™ and ART™ technologies.

Digitalized intelligent automation solutions enable machinists to embrace smart manufacturing to increase operational efficiency and productivity, optimize energy and staffing costs, and achieve 24/7 unmanned production, thereby significantly boosting ROI.

MOTORIZED PALLET CHANGER (MPC)

MPC INCREASE AUTONOMY AND FLEXIBILITY

MPC2

Integrated 2-pallet changer with a minimum space increase. Workpiece loading and unloading are done while machining, reducing down time and enlarging working time per day. The machine is prepared to integrate multi-pallet systems in case longer autonomy is required.

Back loading

The back shutter opens to access the two pallet carriage. In seconds, a new pallet with raw material is precisely located in the rotary-swivelling table, and ready to start working again.

Non-productive time is reduced, productivity increased and return on investment optimized.

Loading/unloading station at the back

The operator access to the finished part from the back which is spacious and highly ergonomic.

Integrate flexible 2-axis robot that can handle different zero-point pallet sides and brands.
The table chuck, the table gripper and pallets are freely selected by end-users to better meet their products requirements.

MPC6

The 6-pallet pool extends the autonomy of the G6 MPC. The system can be integrated at the machine commissioning or later, when the autonomy requirement grows. The loading and unloading is done through the MPC6 system side.

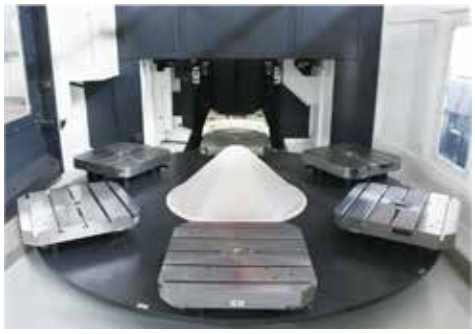

G6 MPC2 + FMS

For higher autonomy requirements, the machine can be integrated in a 12-pallet FMS System. The FMS controller gives full power to make the production as flexible as needed. The working area is still totally accessible for job preparation, standalone operation and supervision.

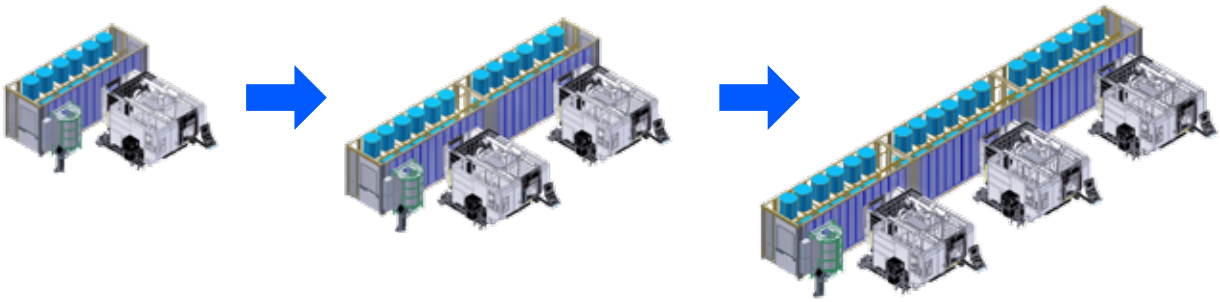

Expandable

The FMS System is expandable to 24 or 36 pallets, 1 to 3 machines and 2 loading stations.

ROBOTIC PALLET CHANGER (RPC)

AXILE's automated G6 Robotic Pallet Changer (RPC) solution features a 2-axis robot that keeps machines supplied with workpieces 24/7 from the back side of the machine. Part processing continues simultaneously within the machining center while operators deal with workpieces at the holding area at the back, significantly raising production efficiency to boost throughput.

Back loading

The back shutter opens to access the two-pallet carriage. In seconds, a new pallet with raw material is precisely located in the rotary-swiveling table, and ready to start working again.

Non-productive time is reduced, productivity increased and return on investment optimized.

Loading / unloading station at the back

The operator access to the finished part from the back which is spacious and highly ergonomic.

Integrate flexible 2-axis robot that can handle different zero-point pallet sides and brands. The table chuck, the table gripper and pallets are freely selected by end-users to better meet their products requirements.

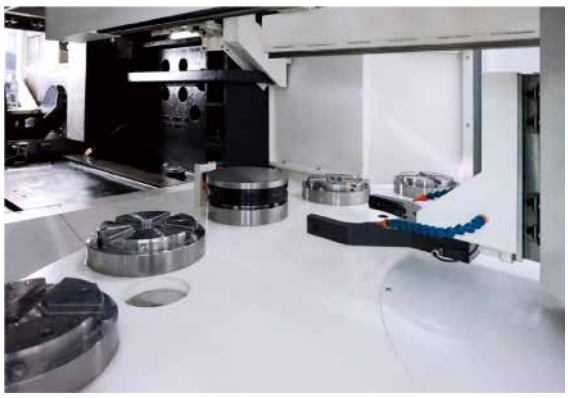

AUTOMATION SELECTION SUMMARY

G6	MPC2	MPC2+FMS	MPC6	RPC8	RPC10	RPC16	RPC20
Table type							
Loader type							
Magazine							
Chuck type							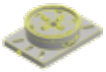
Chuck type	Table integrated 4 hydraulic cones			Erowa MTS 400	Erowa UPC 320	Erowa PC 210	Erowa ITS 148
Gripper type							
Pallet size	⍁ 500 			⍁ 398 	⍁ 320 	ø210 	ø148 
Pallet type	Casting pallet 500x500 mm with/without Hydraulic coupling			Erowa MTS400	Erowa UPC320	Erowa PC210	Erowa ITS148
Number of pallets	2	12 / 24 / 36	6	8	10	16	20
Max. workpiece size	ø500x420 (*ø500x480) 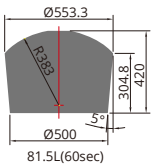 *Max height can increase to 480 but APC time will also increase from 60 s to 90 s.			ø500x305 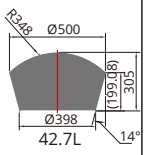	ø400x305 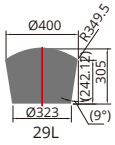	ø230x305 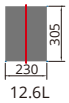	ø160x250 
Max. weighet	400 kg			220 kg	220 kg	98 kg	30 kg

STANDARD & OPTIONAL EQUIPMENT

Standard details of a premium machine

Optional design and organization of electrical connectors and cables

Easier maintenance

High-speed and twisting stress cycles

G6 Standard

All necessary consumables are located together in the side of the machine

Easier maintenance routine for operator

G6 MPC

Chain-type chip conveyor with chip bucket, oil skimmer and built-in 40 bar through spindle coolant pump are standard equipments

The coolant tank is integrated under the tool magazine for space saving layout.

Integrated and ready-to-use 3 hydraulic and 1 pneumatic port. Clamping and unclamping functions by softkeys in the control panel and/or by M-function.

Optional

- Integrated and ready-to-use 8x hydraulic (80 bar) or pneumatic (6 bar) ports
- 4x vacuum port

Simplifies 5X workpiece clamping.

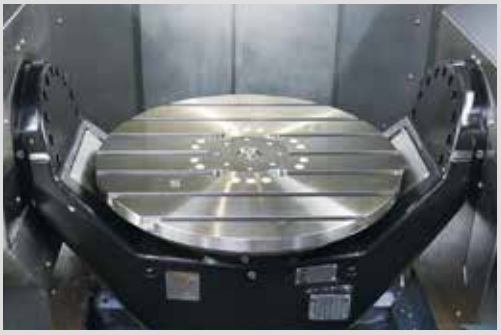

Automatic workpiece measurement (with probe, receiver and reference ball)

Automatic compensation of the linear-rotary axis relative positioning:
Kinematics (Heidenhain), Kinematic chain (Siemens) and Tilted working plane indexing (Fanuc)

For accurate workpiece positioning or in-process measuring of some machining features.

U-type embedded in the table (for highest accuracy).
Laser tool measurement.

Customize the machine to your needs

Spin window (opt)

For easier view of working area when huge amount of coolant and chips are produced

Separate type CTS unit including (opt):

> Cartridge filter
> Paper filter
> Through spindle 40 & 70 bar centrifugal and screw pumps
> Oil skimmer
> Oil cooler

Recommended for high aluminum or cast iron material

Drum type dual-belt chip conveyor (opt)

Chain type conveyor takes bigger and curly chip away. Scrapper type conveyor takes smaller and lighter chips as well as dusty chips away.

LAYOUT AND WORKSPACE

G6 Standard (with chain type 80 tools atc)

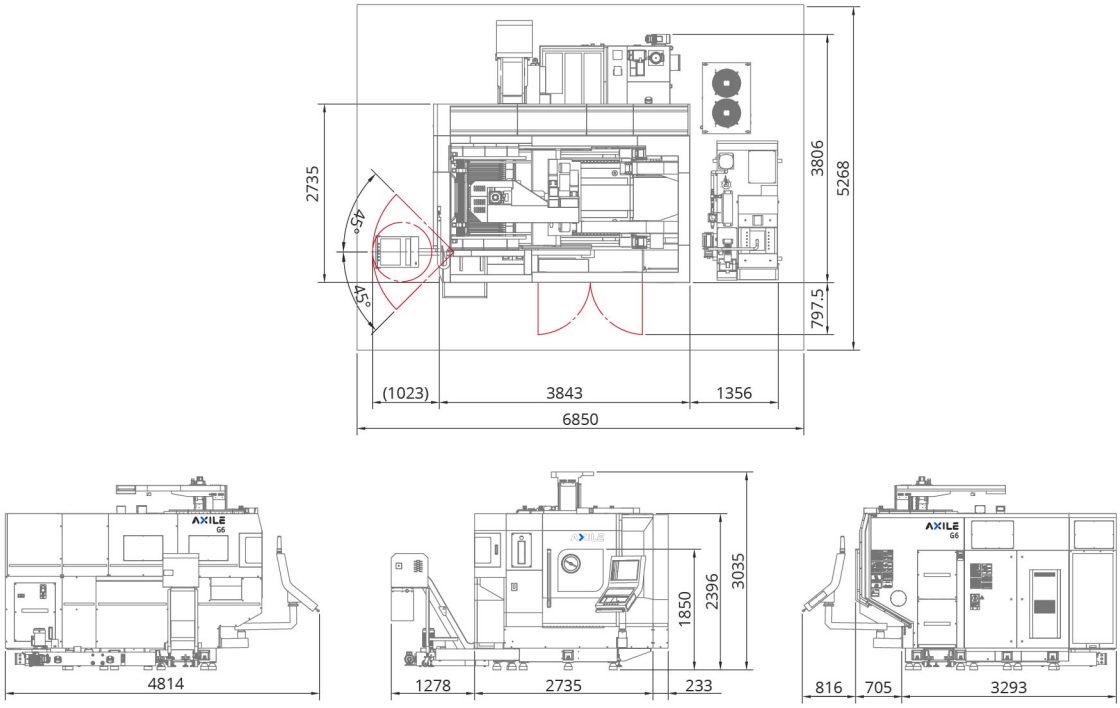

G6 Standard (with arm type 120 tools atc)

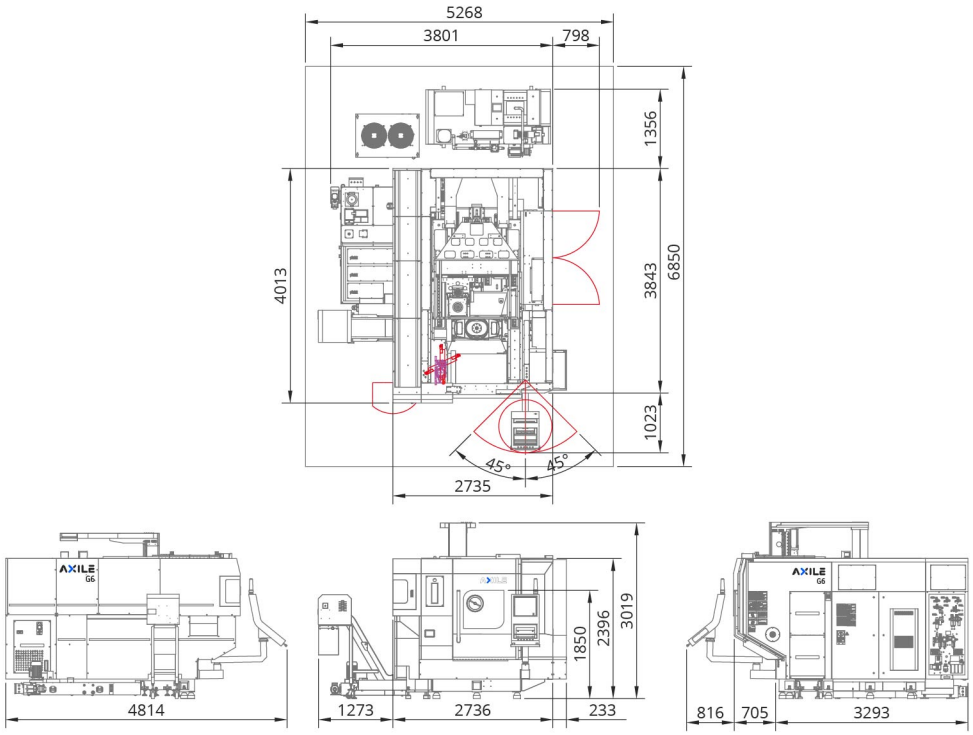

G6 Standard
(with chain type 80 tools atc and scrapper type chip conveyor)

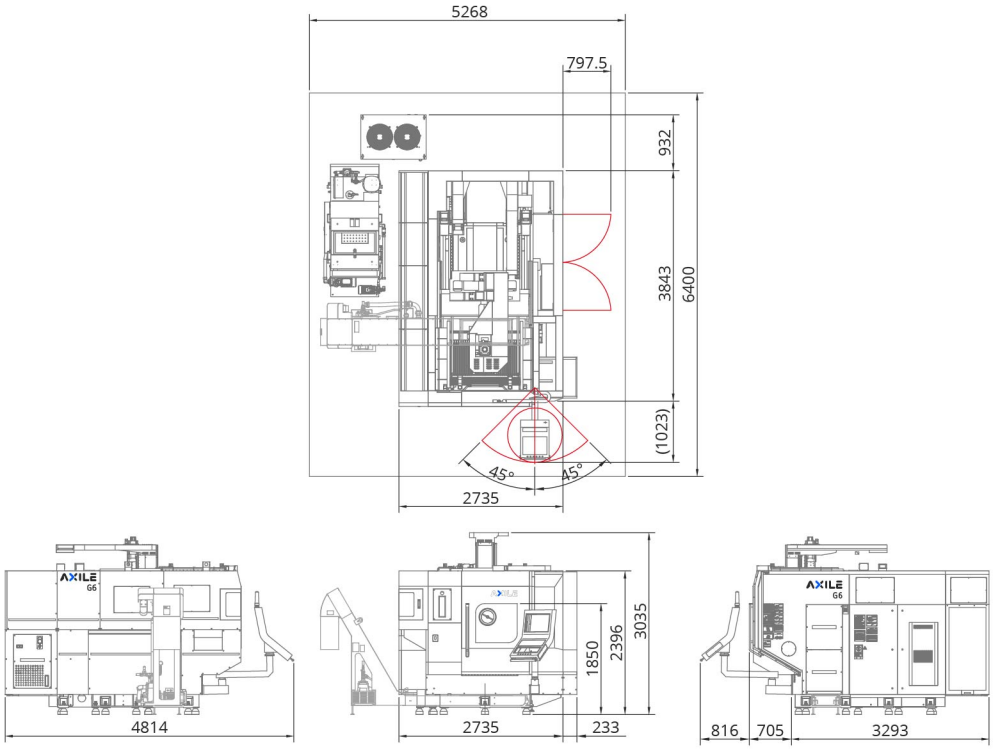

G6 RPC

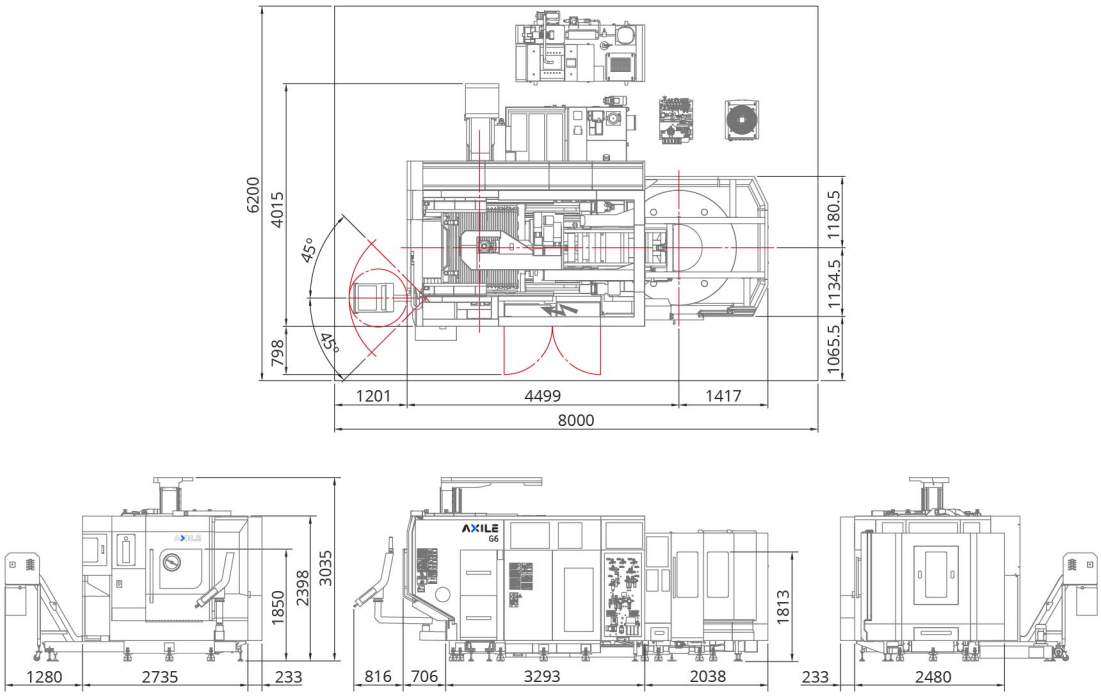

G6 MPC2

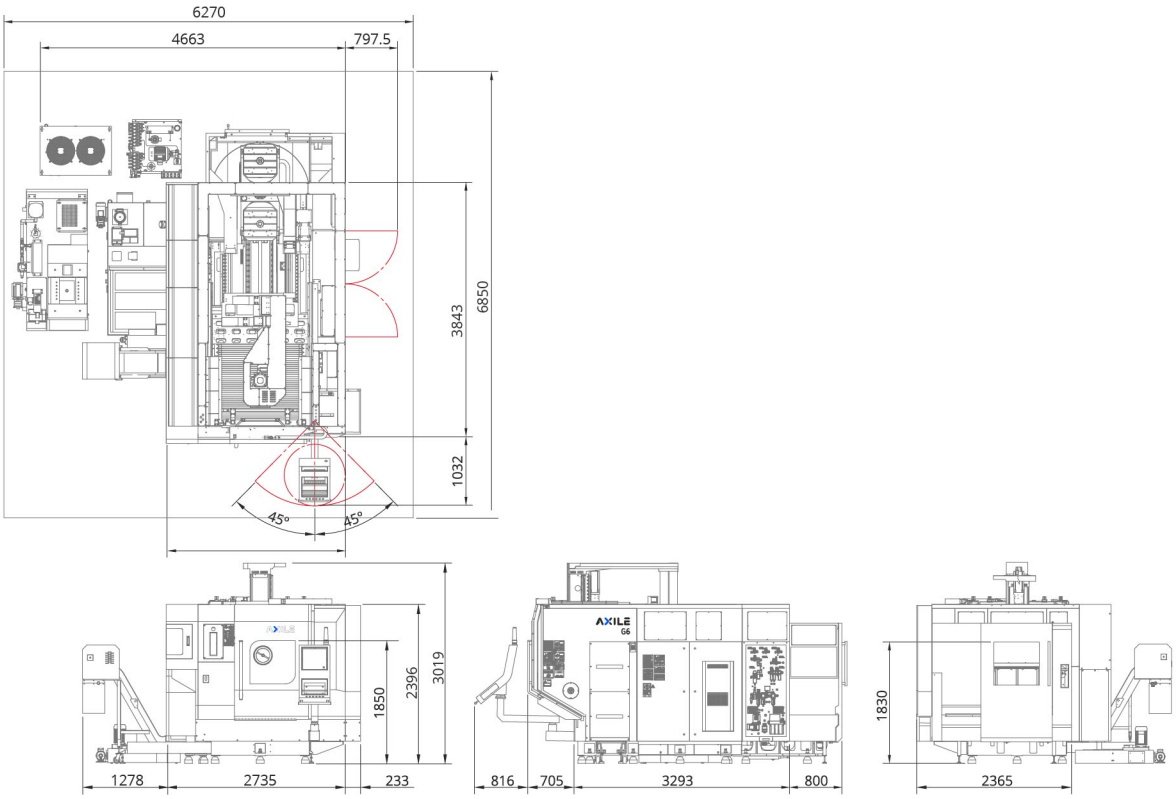

G6 MPC6

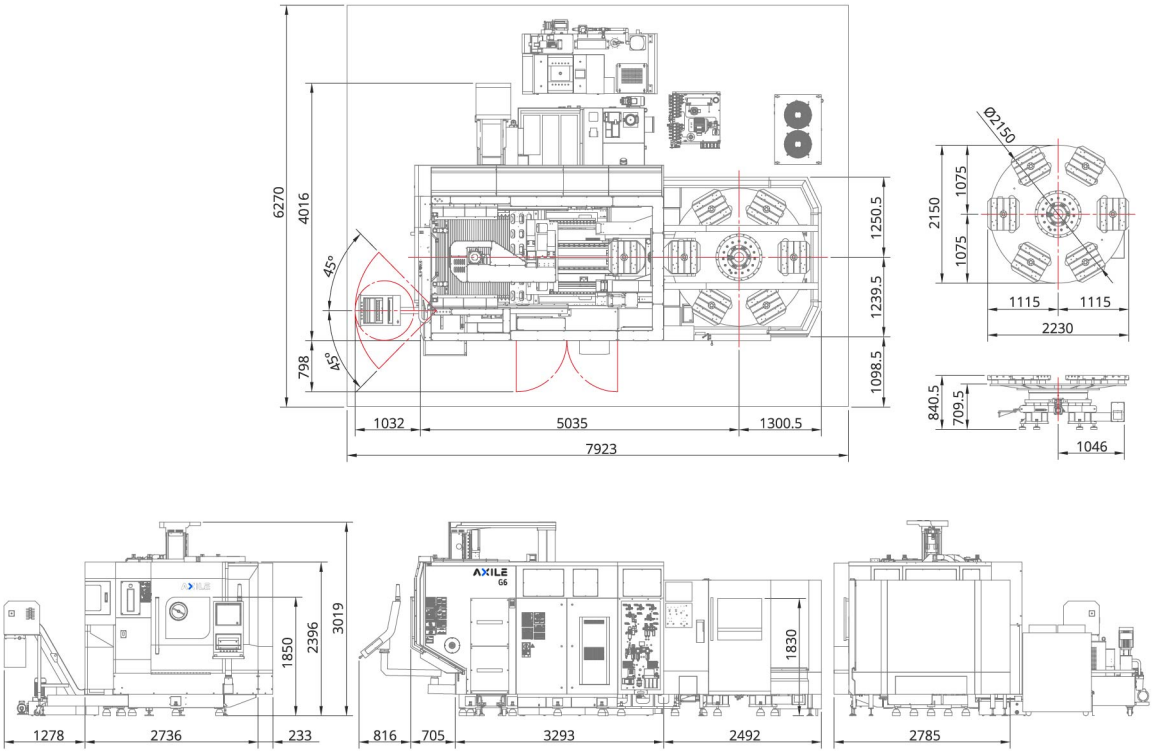

INTERFERENCE

G6 STD / G6 RPC

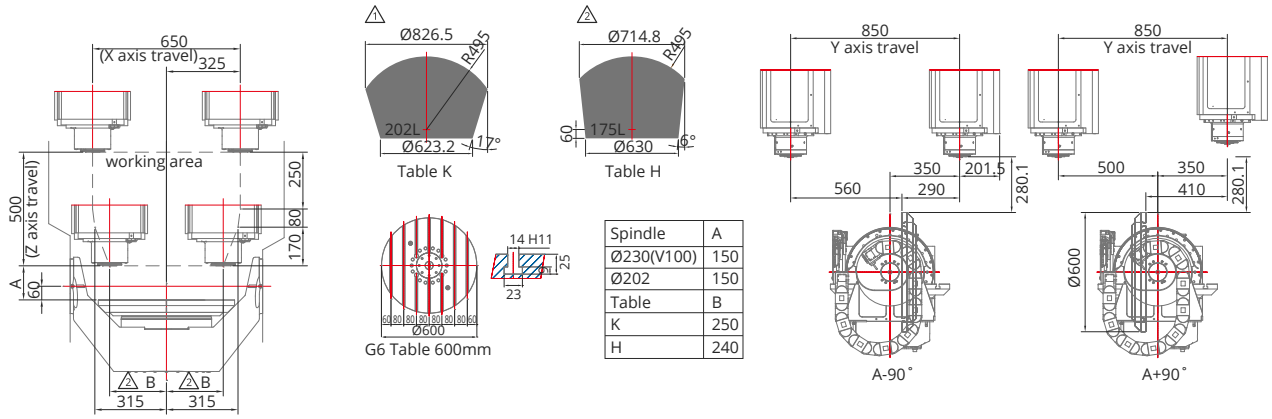

Spindle	A
Ø230(V100)	150
Ø202	150
Table	B
K	250
H	240

G6 MT

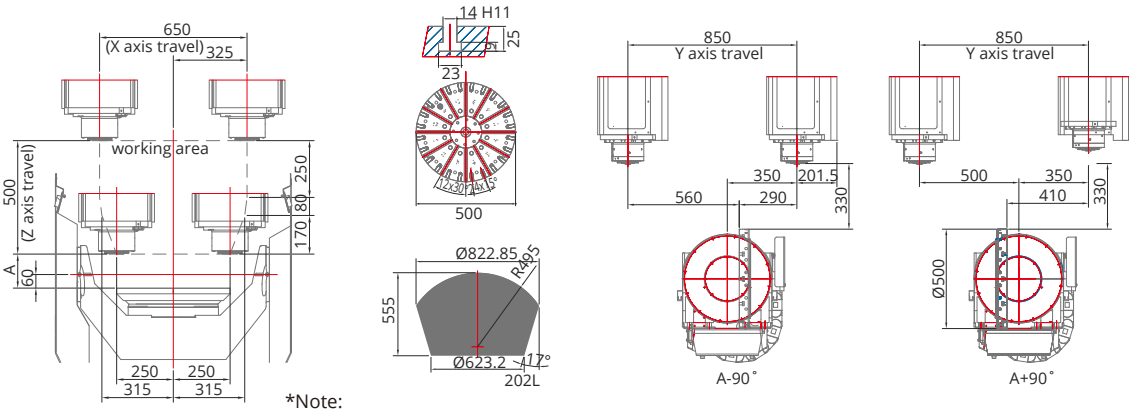

*Note:
The workpiece size for turning is limited by the weight (350 kg), its maximum height and the cutting force applied.
Please request for the limitation diagram or send the drawing of the part to confirm if it can be machined.

G6 MPC

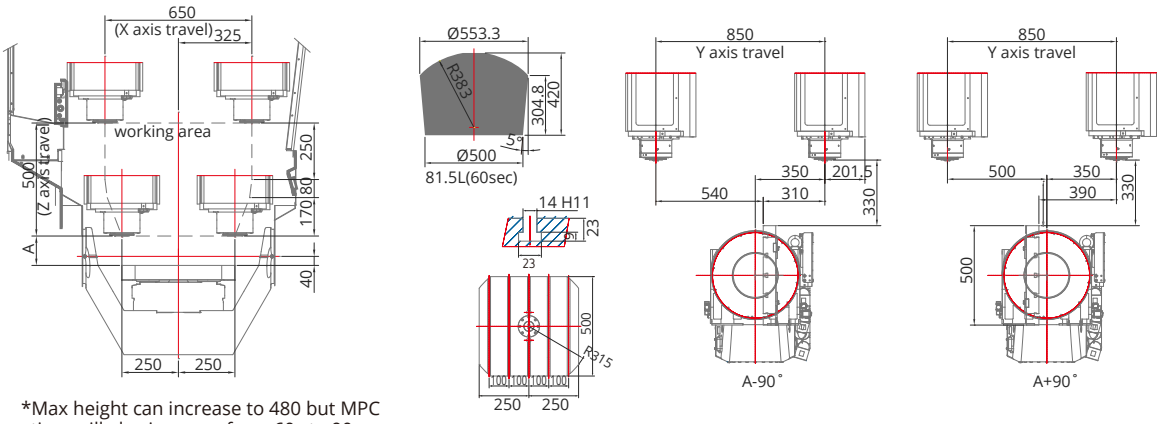

*Max height can increase to 480 but MPC time will also increase from 60s to 90s.

TECHNICAL DATA

COMMON DATA FOR G6

LINEAR AXES		
X travel (carriage left and right)	650 mm	25.6 in
Y travel (gantry back and forth)	850 mm	33.5 in
Z travel (headstock up and down)	500 mm	19.7 in
Max feedrate X/Y/Z	36 m/min	1417 in/min
Guideways type	Roller	
Guideways size X/Y/Z	45 mm	1.7 in
Distance between X/Y guides	500/1110 mm	19.7/43.7 in
Ballscrew diameter/pitch	40/12 mm	1.6/0.5 in
X axis motor power/torque	5/17.7 kW/Nm	6.7/13 hp/ Ft/Ibs
Y axis motor power/torque (x2)	5.7/21.6 (x2) kW/Nm	7.6/15.9(x2) hp/ Ft/Ibs
Z axis motor power/torque	6/26.1 kW/Nm	8/19.3 hp/ Ft/Ibs
ROTARY AXES		
A range (swiveling)	±120 deg	
C (rotary)	360 deg	
SPINDLE (STD)		
Spindle speed	20000 rpm	
Spindle taper	HSK-A63 (milling) HSK-T63 (turning)	
Transmission	Built-in	
Motor type	Asynchronous	
Bearing typefront/rear	Angular ball	
Bearing cooling and lubrication	Oil-air	
Power S1/S6-40%	25/40 kW	33/53 hp
Torque S1/S6-40%	87/135 Nm	64.2/99.6 Ft/Ibs
SPINDLE (OPT)		
Spindle speed	15000 rpm	
Spindle taper	HSK-A63 (milling) HSK-T63 (turning)	
Transmission	Built-in	
Motor type	Asynchronous	
Bearing typefront/rear	Angular ball	
Bearing cooling and lubrication	Oil-air	
Power S1/S6-40%	30/46 kW	40/61 hp
Torque S1/S6-40%	130/200 Nm	95.9/147.5 Ft/Ibs
ACCURACY (VDI/DGQ 3441)		
Positionning	0.005 mm	0.0002 in
Repeatability	±0.0025 mm	±0.0001 in
EXTERNAL COOLANT SUPPLY		
Exteral nozzels coolant supply (number) pressure	(4x) 3 bar	(4x) 43.5 psi
Exteral nozzels air supply (number) pressure	(2x) 6 bar	(2x) 87 psi
Tank capacity	1500 L	396.2 US gal
SPINDLE THROUGH COOLANT SUPPLY (STD)		
High pressure pump	40 bar	580.1 psi
Filter type	Catridge	
SPINDLE THROUGH COOLANT SUPPLY WITH SEPARATE TANK (OPT)		
High pressure pump	40/70 bar	580.1/1015.2 psi
High pressure pump with stepless programable pressure	0-70 stepless	0-1015.2 psi stepless
Filter type	Catridge and paper band	
Additional	Oil-cooler and oil skimmer	
CONTROL UNIT		
Heidenhain	TNC 640	
Siemens	840D SL/Sinumerik one	
Fanuc	31i-B5 Plus	

** Specifications are subject to change without notice.*

COMMON DATA FOR G6 (CONT.)

TOOL CHANGER		
Change type	Chain type	
Carousel drving system	Servomotor	
Magazine positions	Chain type: 80(std), 120(opt)	
Tool shank type	HSK-A63	
Maximum tool length	300 mm	11.8 in
Max tool diameter (with adjacent pot empty)	Ø75/Ø125 mm	Ø3/Ø4.9 in
Maximum tool weight	8 kg	17.6 lbs
Max. loading weight	Chain type: 640/800 kg	Chain type: 1410/1763 lbs

COMMON DATA FOR G6 STANDARD/G6 RPC(CONT.)

WORKPIECE AND TABLE		
Table size	Ø600 mm	Ø23.6 in
Maxium table load	600 kg	1323 lbs
T-slot (w/pitch/no)	14x80x7 mm	0.5x3.1x0.3 in
Number and hydraulic ports	3	
Working pressure of hydraulic ports	80 bar	1160.3 psi
Number and pneumatic ports	1	
Working pressure of pneumatic ports	6 bar	87 psi
SPINDLE		
Spindle taper	HSK-A63	
Spindle nose to rotary table clamping surface	150~650	
ROTARY AXES		
Maximum swiveling (A) speed	100 rpm	
Maximum rotary (C) speed	200 rpm	
Driving system in swiveling (A) axis	Torque motor	
Driving system in rotary (C) axis	Torque motor	
Power & torque of swivelling (A) axis	9.8/1040 kW/Nm	13.1/767 hp/ Ft/lbs
Power & torque of rotary (C) axis	8.4/401 kW/Nm	11.2/401 hp/ Ft/lbs
Brake type of swivelling (A) axis	Hydraulic clamping	
Braking torque of swivelling (A) axis	3200 Nm	2360.2 Ft/lbs
Brake type of rotary (C) axis	Hydraulic clamping	
Braking torque of rotary (C) axis	2000 Nm	1475.1 Ft/lbs
MEASURING FEEDBACK		
Linear axes type	Linear scale	
Linear axes resolution	0.1 µm	
Rotary axes type	Rotary scale	
Rotary axes accuracy	±5”	
SUPPLES		
Installed power	60 kVA	
DIMEMSION		
Length (w & w/o conveyor)	STD: 2970/4250 mm RPC: 3380/4180 mm	STD: 9.7/13.9 Ft RPC: 11/13.7 Ft
Width	STD: 4000 mm RPC: 6040 mm	STD: 13.1 Ft RPC: 19.8 Ft
Height	3035 mm	10 Ft
Weight	STD: 12000 kg RPC: 20000 kg	STD: 26455 lbs RPC: 44092 lbs
Floor Space	STD: 2970x4000 mm RPC: 3380x6040 mm	STD: 9.7x13.1 Ft RPC: 11x19.8 Ft

** Specifications are subject to change without notice.*

SPECIFIC DATA FOR G6 MPC

WORKPIECE AND TABLE		
Table size	Ø500x500 mm	Ø19.7x19.7 in
Maxium table load	400 kg	882 lbs
T-slot (w/pitch/no)	14x100x5 mm	0.5x3.9x0.2 in
Threaded hole	M12x100 mm	M0.4x3.9 in
Number and hydraulic ports	3	
Working pressure of hydraulic ports	80 bar	1160.3 psi
Number and pneumatic ports	1	
Working pressure of pneumatic ports	6 bar	87 psi
SPINDLE		
Spindle taper	HSK-A63	
Spindle nose to rotary table clamping surface	130~630	
ROTARY AXES		
Maximum Swiveling (A) speed	100 rpm	
Maximum rotary (C) speed	200 rpm	
Driving system in swiveling (A) axis	Dual torque motor	
Driving system in rotary (C) axis	Torque motor	
Power & torque of swiveling (A) axis	9.8/1040 kW/Nm	13.1/767.5 hp/ Ft/lbs (per torque motor)
Power & torque of rotary (C) axis	8.4/401 kW/Nm	11.2/295.8 hp/ Ft/lbs
Brake type of swiveling (A) axis	Hydraulic clamping	
Braking torque of swiveling (A) axis	3200 Nm	2360.2 Ft/lbs
Brake type of rotary (C) axis	Hydraulic clamping	
Braking torque of rotary (C) axis	2000 Nm	1475.1 Ft/lbs
MEASURING FEEDBACK		
Linear axes type	Linear scale	
Linear axes resolution	0.1 µm	
Rotary axes type	Rotary scale	
Rotary axes accuracy	±5”	
APC SYSTEM		
APC type	ACW500	
Exchange time	60 sec	
SUPPLIES		
Installed power	60 kVA	
DIMEMSION		
Length (w & w/o conveyor)	3150/3990 mm	10.3/13 Ft
Width	4750 mm	15.6 Ft
Height	2970 mm	9.7 Ft
Weight	16000 kg	35275 lbs
Floor Space	3150x4750 mm	10.3x15.6 Ft

** Specifications are subject to change without notice.*

SPECIFIC DATA FOR G6 MT

WORKPIECE AND TABLE		
Table size	Ø500 mm	Ø19.7 in
Maxium table load	350 kg(Turning)/500 kg(Milling)	771 lbs(Turning)/1102 lbs(Milling)
T-slot (w/pitch/no)	14x30x12 mm	0.5x1.2x0.5 in
SPINDLE		
Spindle taper	HSK-T63/Capto C6	
Spindle nose to rotary table clamping surface	150~650	
ROTARY AXES		
Maximum Swiveling (A) speed	15 rpm(Turning) 100 rpm(Milling)	
Maximum rotary (C) speed	1500 rpm(Turning) 100 rpm(Milling)	
Driving system in swiveling (A) axis	Torque motor	
Driving system in rotary (C) axis	Torque motor	
Power & torque of swiveling (A) axis	9.8/1040 kW/Nm	13.1/767.5 hp/ Ft/lbs
Power & torque of rotary (C) axis	38/450 kW/Nm	50.9/332 hp/ Ft/lbs
Brake type of swiveling (A) axis	Hydraulic clamping	
Braking torque of swiveling (A) axis	3200 Nm	2360.2 Ft/lbs
Brake type of rotary (C) axis	Hydraulic clamping	
Braking torque of rotary (C) axis	2000 Nm	1475.1 Ft/lbs
MEASURING FEEDBACK		
Linear axes type	Linear scale	
Linear axes resolution	0.1 µm	
Rotary axes type	Rotary scale	
Rotary axes accuracy	±5”	
SUPPLIES		
Installed power	60 kVA	
DIMEMSION		
Length (w & w/o conveyor)	2250/3560 mm	7.4/11.7 Ft
Width	4900 mm	16 Ft
Height	2970 mm	9.7 Ft
Weight	12000 kg	26456 lbs
Floor Space	3560x4900 mm	11.7x16 Ft

** Specifications are subject to change without notice.*

AXILE MACHINE

E info@axilemachine.com
W www.axilemachine.com

2021/04/2000